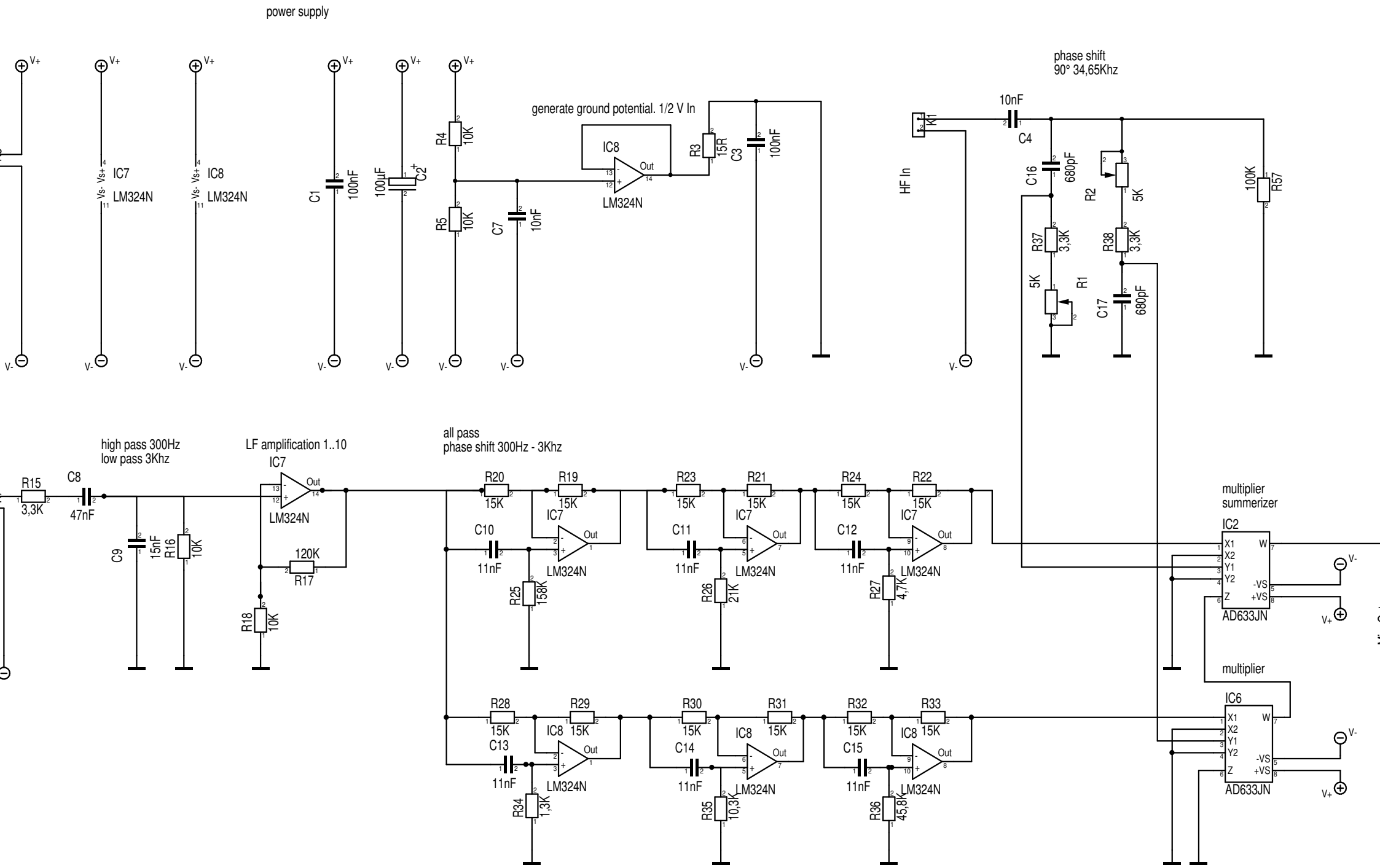
power supply
V+
V-
IC7
LM324N
IC8
LM324N
C1
100nF
100µF
C2
R4
10K
R5
10K
C7
10nF
generate ground potential. 1/2 V In
IC8
Out
LM324N
R3
15R
C3
100nF
phase shift
90° 34,65Khz
10nF
C4
K1
HF In
C16
680pF
R2
5K
100K
R57
R37
3,3K
R38
3,3K
5K
R1
C17
680pF
high pass 300Hz
low pass 3Khz
R15
3,3K
C8
47nF
C9
15nF
R16
10K
LF amplification 1..10
IC7
Out
LM324N
120K
R17
R18
10K
all pass
phase shift 300Hz - 3Khz
R20
15K
R19
15K
C10
11nF
R25
158K
R23
15K
R21
15K
C11
11nF
R26
21K
R24
15K
R22
15K
C12
11nF
R27
4,7K
multiplier
summerizer
IC2
X1
X2
Y1
Y2
Z
W
-VS
+VS
AD633JN
multiplier
IC6
R28
15K
R29
15K
C13
11nF
R34
1,3K
R30
15K
R31
15K
C14
11nF
R35
10,3K
R32
15K
R33
15K
C15
11nF
R36
45,8K